Installation Manual

Lithium Battery Pack

SOLUNA 15K Pack HV

DLG Energy (Shanghai) Co., Ltd.

June 2020 Version V1.1

About this manual

This manual describes how to install the DLG Energy (Shanghai) Co.,Ltd of Soluna 15K PACK HV. Read this manual before you attempt to install the product, and follow the instructions throughout the installation process.
If you are uncertain about any of the requirements, recommendations, or safety procedures described in this manual, contact DLG Energy (Shanghai) Co.,Ltd immediately for advice and clarification.
The information included in this manual is accurate at the time of publication. however, with regards to the product design and technical specification updates, our company reserves the right to make changes at any time without prior notice. e. In addition, the illustrations in this manual are meant to help explain system configuration concepts and installation instructions. The illustrated items may differ from the actual items at the installation location.

Please search the products sections of the websites www.soluna.com.au or www.solunabattery.com to confirm that you are reading the latest version of the Installation Manual. Please search for the Australian version.

Version Information

Version	Date	Content	Author
V1.0	May 2020	First edition	Henry
V1.1	June 2020	Changed the contact details to solunabattery.com	Henry

Table of Contents

1. Safety precautions

Warning Sign

Warning signs are used to warn you about the conditions that may cause severe injury or damage to the device. They instruct you to exercise caution to prevent danger. The following table describes the warning signs used in this manual.

Sign	Description
	This battery pack contains high voltage which can cause electric shock resulting in severe injury.
	Make sure that the battery polarity is connected correctly.
	Keep the battery pack away from open flame or ignition sources
	Keep the battery pack away from children.
	Read the manual before installing and operating the battery pack.
	The battery pack is heavy enough to cause severe injury
	The battery pack may leak corrosive electrolyte.
	The battery pack may explode.
	The battery pack should not be disposed with household waste at the end of its working life.
	Physical injury or damage to the devices may occur if related requirements are not followed

Safety instructions

For safety reasons, installers are responsible for familiarizing themselves with the contents of this manual and all warnings before performing installation.

General safety precautions

⚠	Failure to observe the precautions described in this section can cause serious injury to persons or damage to property, observe the following precautions

Risks of explosion

- Do not subject the battery pack to strong impacts.
- Do not crush or puncture the battery pack.
- Do not dispose of the battery pack in a fire.

Risks of fire

- Do not expose the battery pack to temperatures in excess of 60°C.
- Do not place the battery pack near a heat source, such as a fireplace.
- Do not expose the battery pack to direct sunlight.
- Do not allow the battery connectors to touch conductive objects such as wires.

Risks of electric shock

- Do not disassemble the battery pack.
- Do not touch the battery pack with wet hands.
- Do not expose the battery pack to moisture or liquids.
- Keep the battery pack away from children and animals.

Risks of damage to the battery pack

Do not allow the battery pack to come in contact with liquids.

Do not subject the battery pack to high pressures.

Do not place any objects on top of the battery pack.

Battery handling guide

- Use the battery pack only as directed.
- Do not use the battery pack if it is defective, appears cracked, broken or otherwise damaged, or fails to operate broken or otherwise damaged, or fails to operate.

- Do not attempt to open, disassemble, repair, tamper with, or modify the battery pack. The battery pack is not user serviceable.
- To protect the battery pack and its components from damage when transporting, handle with care.
- Do not impact, pull, drag or step on the battery pack.
- Do not subject it to any strong force.
- Do not insert foreign objects into any part of the battery pack.
- Do not use cleaning solvents to clean the battery pack.

Response to emergency situations

The Soluna 15K PACK HV battery pack comprises multiple batteries that are designed to prevent hazards resulting from failures. However, DLG cannot guarantee their absolute safety.

Leaking batteries

If the battery pack leaks electrolyte, avoid contact with the leaking liquid or gas. Electrolyte is corrosive and contact may cause skin irritation and chemical burns. If one is exposed to the leaked substance, do these actions:

Inhalation

Evacuate the contaminated area, and seek medical attention immediately.

Eye contact

Rinse eyes with flowing water for 15 minutes, and seek medical attention immediately.

Skin contact

Wash the affected area thoroughly with soap and water, and seek medical attention immediately.

Ingestion

Induce vomiting, and seek medical attention immediately.

Fire

In case there is a fire, always have an ABC or carbon dioxide extinguisher.

⚠	The battery pack may catch fire when heated above 150°C. If a fire breaks out where the battery pack is installed, do these actions:

- Extinguish the fire before the battery pack catches fire.
- If it is impossible to extinguish the fire but you have time, move the battery pack to a safe area before it catches fire.
- If the battery pack has caught fire, do not try to extinguish the fire. Evacuate people immediately.

⚠	If the battery catches fire, it will produce noxious and poisonous gases. Do not approach.

Wet batteries

If the battery pack is wet or submerged in water, do not try to access it. Contact DLG or your distributor for technical assistance.

Damaged batteries

Damaged batteries are dangerous and must be handled with extreme caution. They are not fit for use and may pose a danger to people or property.

If the battery pack seems to be damaged, pack it in its original container, and then return it to DLG or your distributor.

⚠	Damaged batteries may leak electrolyte or produce flammable gas. If you suspect such damage, immediately contact DLG for advice and information.

Qualified installers

This manual and the tasks and procedures described herein are intended for use by skilled workers only. A skilled worker is defined as a trained and qualified electrician or installer who has all of the following skills and experience:

- Knowledge of the functional principles and operation of on-grid systems.
- Knowledge of the dangers and risks associated with installing and using electrical devices and acceptable mitigation methods.
- Knowledge of the installation of electrical devices
- Knowledge of and adherence to this manual and all safety precautions and best practices.

2. Product Introduction

The Soluna 15K PACK HV is an NCM lithium battery product with a BMS (Battery Management System). It is a high-voltage battery module with CAN communication, under-voltage, over-voltage, over-current, over-temperature, under-temperature protection functions. It has the characteristics of high energy density, long life, safety and reliability and so on, and It is your trustworthy green environmental product

Features

- Excellent safety performance.
- Long cycle life.
- Support for CAN-communication.
- High energy density
- Excellent battery management system

Application

- Back-up power
- Micro-grid
- Home Energy Storage system

Outline Dimension

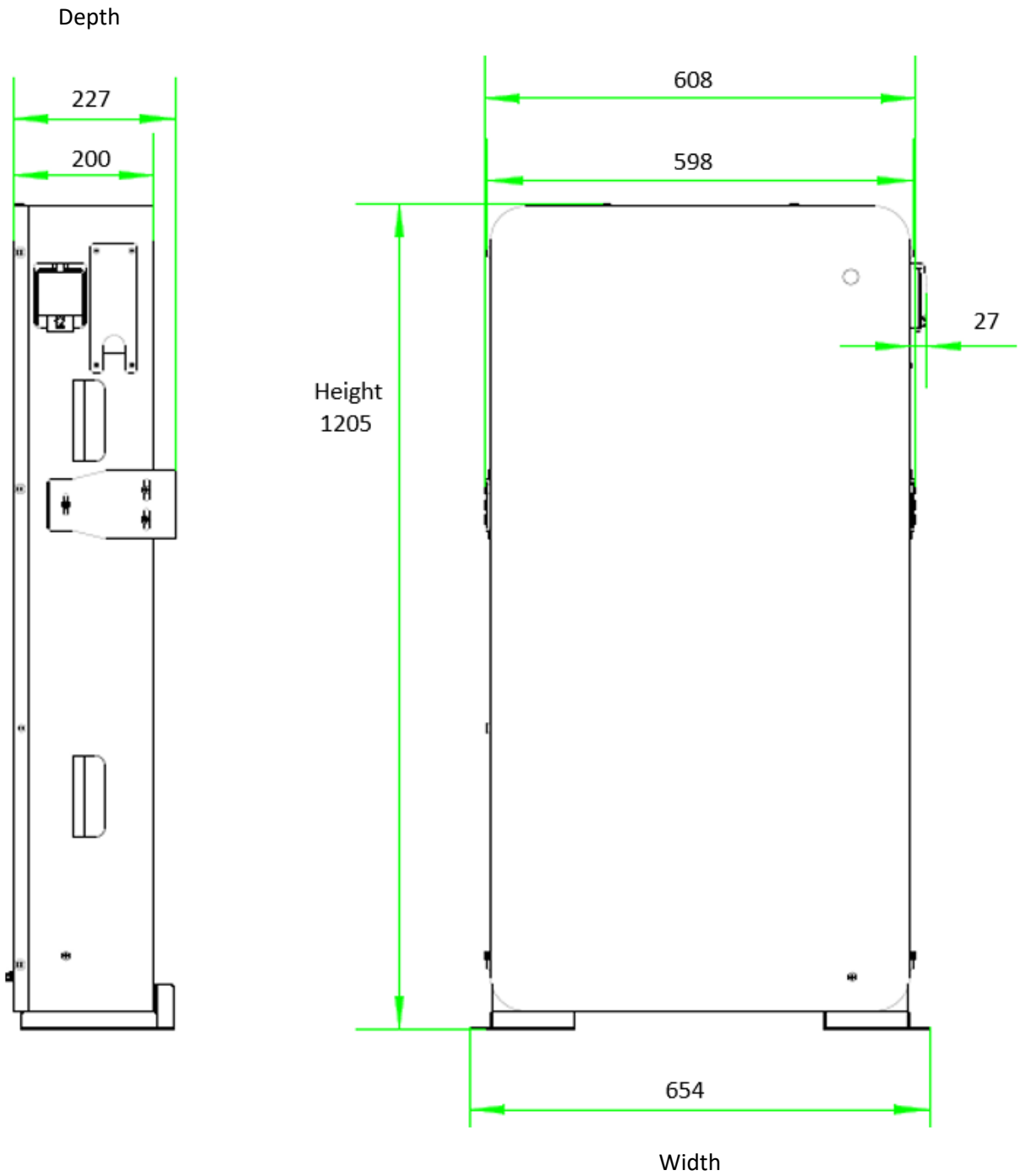

Figure 2.1 outline dimension

Width	654±2	mm
Depth	227±2	mm
Height	1205±3	mm
Weight	148	kg

Technical data

Physical Characteristics

Width	654±2mm
Depth	227±2mm
Height	1205±3mm
Weight	148kg

Electrical Characteristics

Battery type	NCM
Total Energy Capacity	15 kWh
Usable Energy Capacity	12 kWh
Battery Capacity	36.6 Ah
Voltage Range	350~478V
Nominal Voltage	410V
Charge Voltage (CV)	478V
Discharge Voltage	342V
Charge/Discharge Current (Nominal)	15A/15A
Max. Charge/Discharge Current	30A/30A
Charge/Discharge Power (Nominal)	6 kW
Max .Charge/Discharge Power	10 kW
DOD	80%
Cycle life	≥3600
Battery Pack Round-Trip Efficiency	>95%
DC Disconnect	Contactor Fuse

BMS

Power consumption	≤100mA (work), ≤0.1mA (sleep)
Monitoring parameters	System Voltage, System Current Cell Voltage, Cell temp
Communication	CAN

Operating Conditions

Operating Temperature	-10~45 ℃
Operating Temperature (Recommended)	15~30 ℃
Storage Temperature	-20~60 ℃
Humidity	5%~95%
Altitude	Max. 2,000 m
Cooling Strategy	Natural Convection

Reliability & Certification

Certificates	Cell：UL1642 Battery：IEC62619 & UL1973
Hazardous Materials Classification	Class 9
Transportation	UN38.3
Ingress Rating	IP54

Appearance

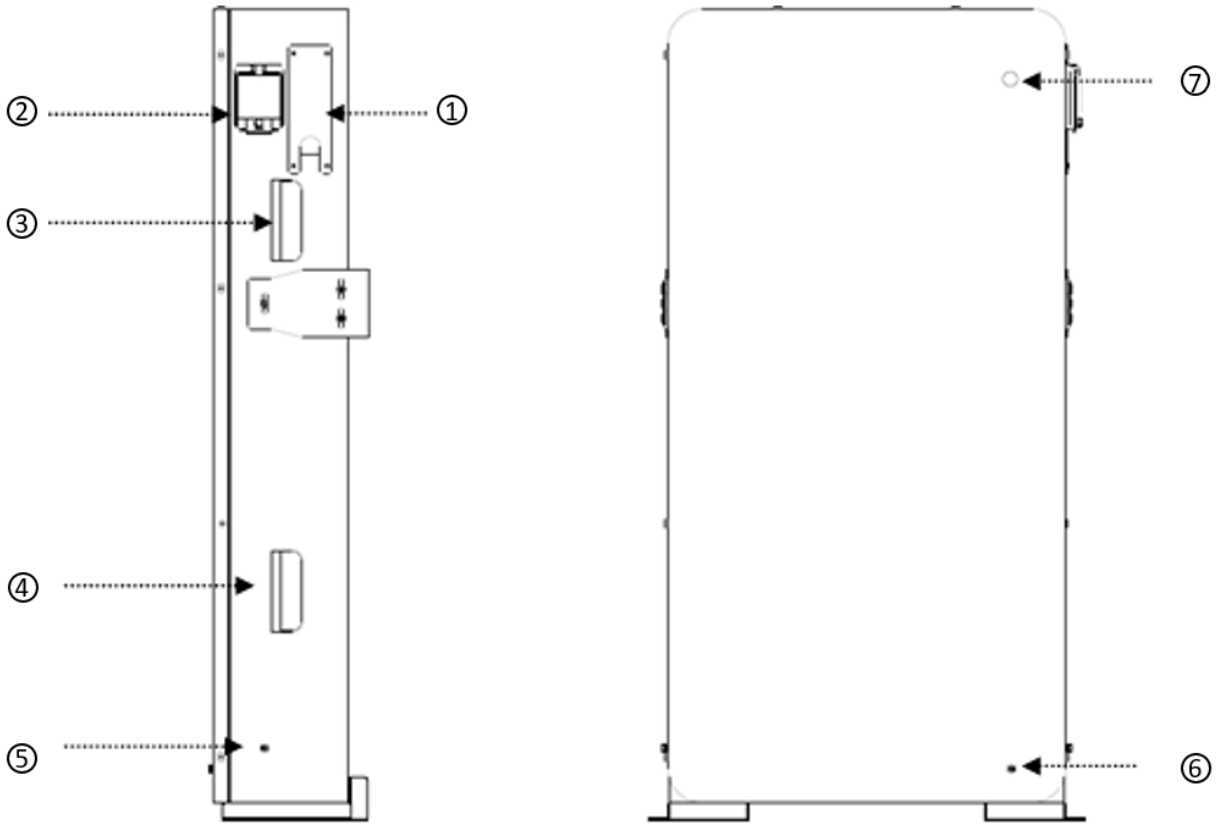

Figure 2.2 Appearance

Number	Name	Remark
①	Cable entry	
②	Power ON/OFF	
③	Upper handle	
④	Lower handle	
⑤	Grounding	

⑥	Grounding	
⑦	Power light	

Wring port

User can see the wiring port of Soluna 15K PACK HV after the cover cap opened, please see the below picture in details.

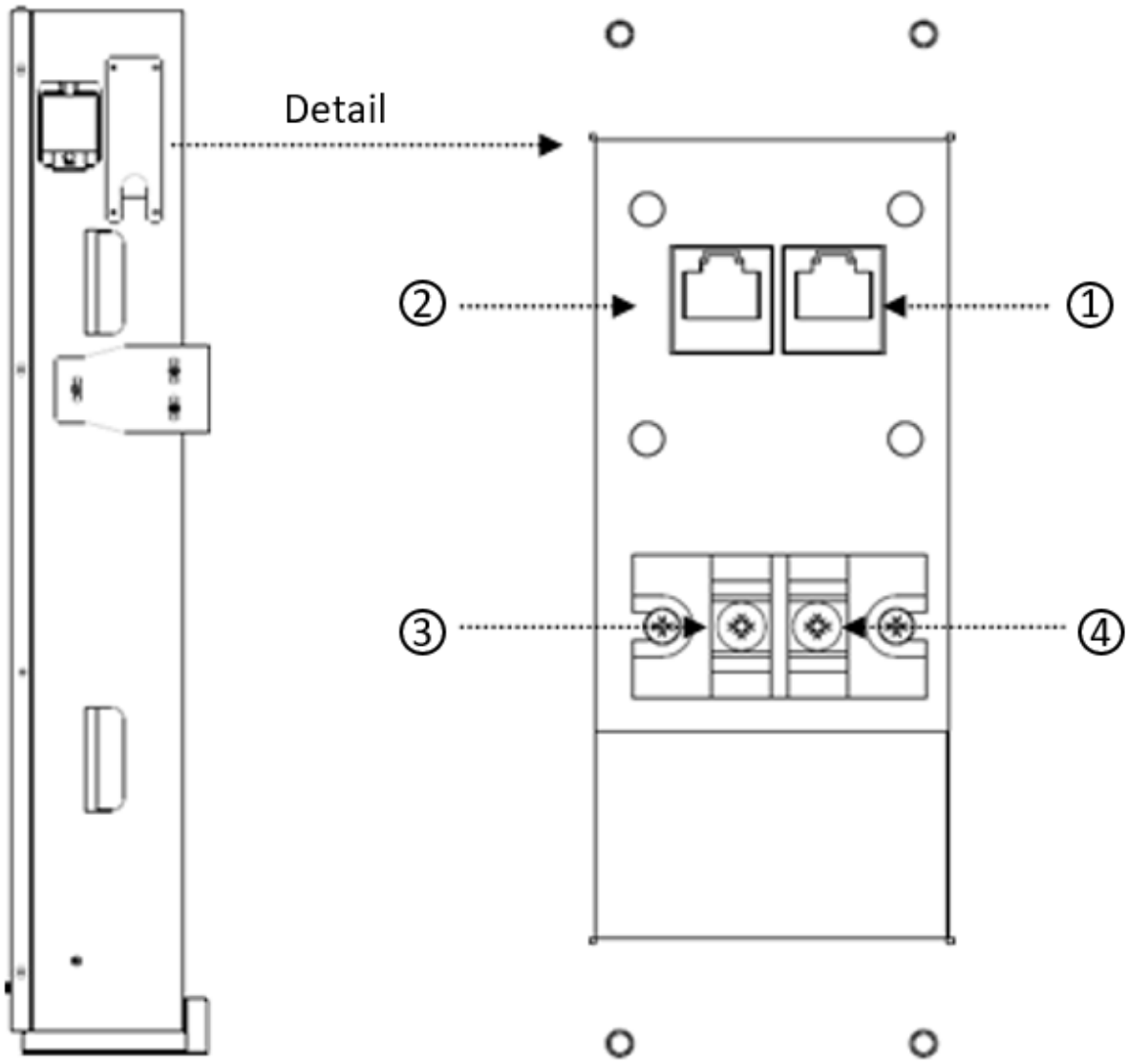

Figure 2.3 wiring port

Number	Name	Remark
①	CAN1 port	For external communication (inverter)
②	CAN2 port	For internal communication (BMS)
③	Battery '+'	
④	Battery '-'	

CAN communication interface definition (CAN 1 & CAN 2)

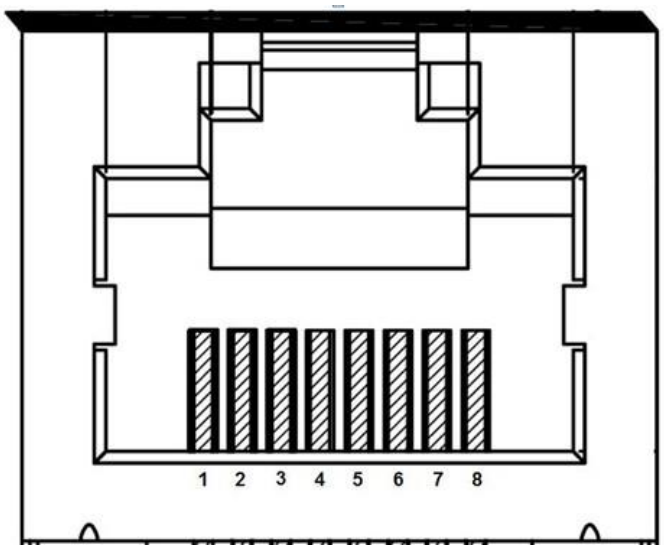

Figure 2.4 CAN interface definition

CAN1 port (for external communication)

1	2	3	4	5	6	7	8
—	—	—	CAN1H	CAN1L	—	—	—

CAN2 port (for internal communication)

1	2	3	4	5	6	7	8
—	—	—	—	—	—	CAN2H	CAN2L

Remark

CAN1H/CAN1L using for external communication

CAN2H/CAN2L using for internal communication

3 Installation

⚠	The battery pack is too heavy for one to carry. Make sure that two or more persons are available。

Unpacking the package

Please see the below figure for the packing box of Soluna 15K PACK HV.

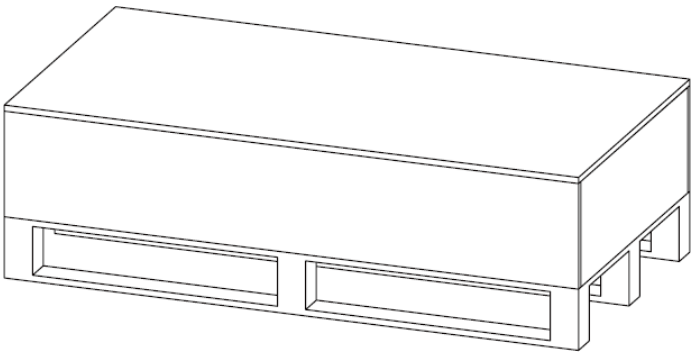

Figure 3.1 Packing box

Remove the nails from the wooden case with a claw hammer and open the wooden case, then, remove the wooden board .

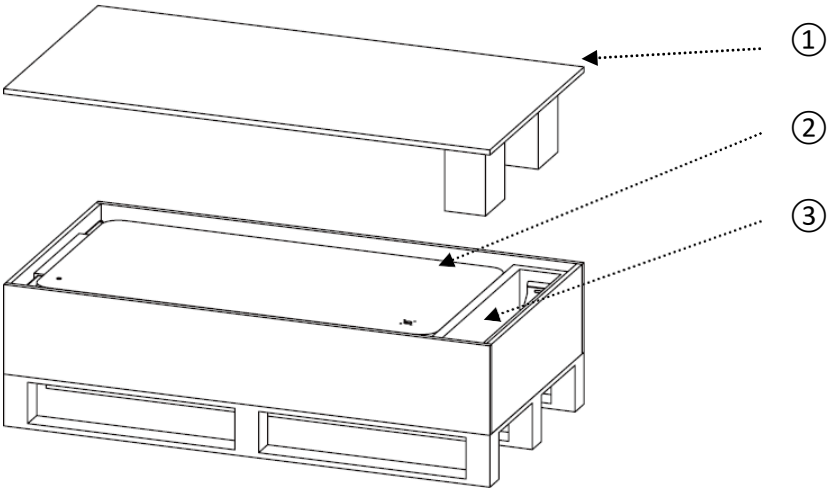

Number	Name	Remark
①	Wooden board	
②	Soluna 15K PACK HV	
③	Accessory Box	

Pull out the battery pack and stand it upright. Check if the battery pack is damaged. All the other items are contained in a box in one corner of the carton. Take them out and check if any item is missing.

Keep the carton for future storage or transportation

Packing lists

The following table lists the numbers of each item included. If anything is damaged or missing, contact DLG or your distributor.

Item	Name	Qty (pcs)	Remark
1	Soluna 15K PACK HV	1	
2	PE wire	1	
3	Inner-hexagon wrench(3.0)	1	
4	Inner-hexagon wrench(4.0)	1	
5	Inner-hexagon screw (M4)	4	
6	Inner-hexagon screw （M6）	2	
7	Phillips screw（M6）	8	
8	Expansion screw	8	
9	CAN communication wire	1	

Installation materials

These installation materials shall be prepared by installers.

- Charging cables

Installation location

We recommend that Soluna 15K PACK HV is used in Soluna Home energy storage systems, if not, please Make sure that the installation location meets the following conditions:

- The building is designed to withstand earthquakes.
- The location is far away from the sea, to avoid salt water and humidity.
- The floor is flat and level.
- There are no flammable or explosive materials nearby.
- The ambient temperature is between 15 and 30°C.
- The temperature and humidity remain at a constant level.
- There is minimal dust and dirt in the area.
- There are no corrosive gases present, including ammonia and acid vapor.

⚠	If the ambient temperature is outside the operating range, the battery pack stops operating to protect itself. The optimal temperature range for the battery pack to operate is 15°C to 30°C. Frequent exposure to harsh temperatures may deteriorate the performance and lifetime of the battery pack.

Installation tools

The following tools are required to install the battery pack:

Item	Photo	Name
1		Phillips-screwdriver bit
2	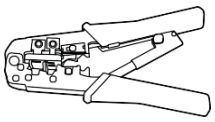	Network crimper
3	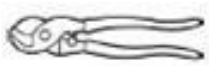	Wire cutters
4	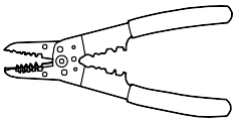	Wire stripper
5	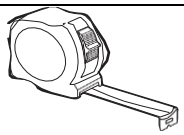	Tape measure

Use properly insulated tools to prevent accidental electric shock or short circuits. Use adjustable tools and measuring instruments that are certified for precision and accuracy.

Safety gear

Wear the following safety gear when dealing with the battery pack. Installers must meet the relevant requirements of international standards, such as IEC 60364, or the domestic legislation.

Item	Photo	Name
1		Insulated gloves
2		Safety goggles
3		Safety shoes

Wiring specification

In order to standardize the wiring specification of Soluna 15K PACK HV, the following requirements are required for connecting wires of Soluna 15K PACK HV.

Battery wire	Communication cable
It is recommended to use 8AWG of conductor with double insulation	It is recommended to use Standard communication cable with shielding function

4. How to operate Soluna 15K PACK HV

Step: please see below information for details.

1. Connect the inverter and battery module with communication wire.
2. Turn on the breaker , the breaker is on the right side of Soluna 15K Pack

Please see below figure for details.

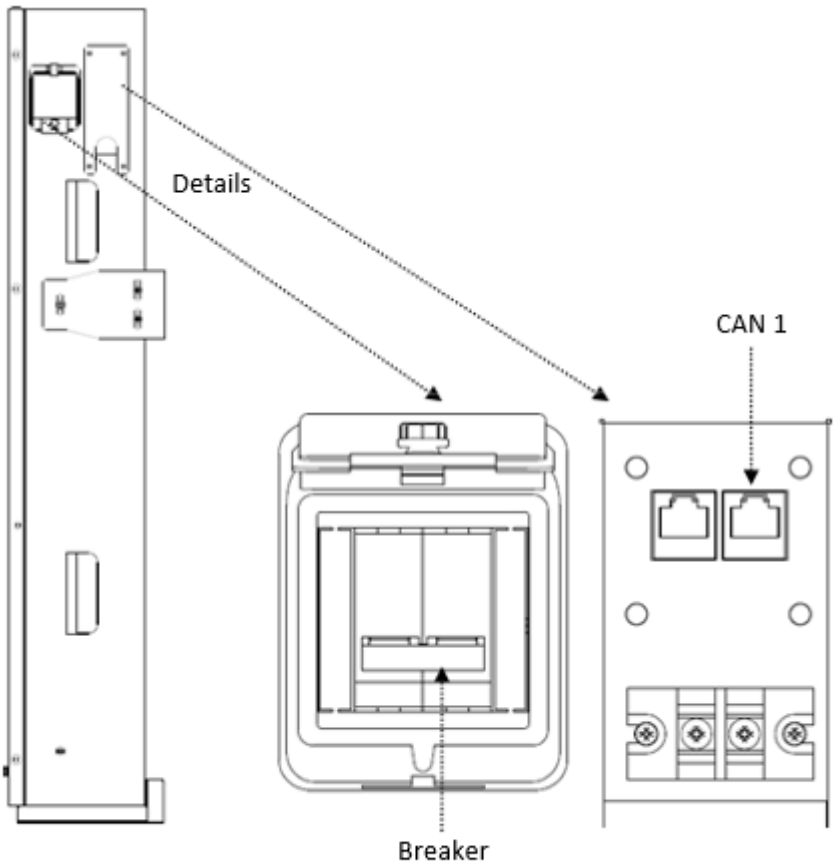

Remark:
CAN1 is connected to inverter for communication

5. Troubleshooting

Check the indicators on the front to determine the state of the battery pack.

A warning state is triggered when a condition, such as with voltage or current or temperature, is beyond design limitations.

The battery pack's BMS periodically reports its operating state to the inverter. when the battery pack falls outside prescribed limits, it enters a warning state. When a warning is reported, the inverter immediately stops operation. Use the monitoring software on the inverter to identify what caused the warning. The possible warning messages are as follows:

- Battery Over Voltage
- Battery Under Voltage
- Battery Over Temperature
- Battery Under Temperature
- Battery Discharge Over Current
- Battery Charge Over Current

The abnormal state is cleared when the battery pack recovers normal operation.

6. Contact us

If any questions, please contact us.

DLG Energy (Shanghai) Co.,Ltd

Add: No.3492 Jinqian Road, Shanghai, China 201406
Tel: +86-21-57475835 ext 8102
Email: sales@solunabattery.com
Web: www.solunabattery.com